MA–25 “GPS Antenne avec LNA“

- **Compact & Sensitive antenne GPS à l'amplification des signaux Excellent pour les applications mobiles**
- **Le profil bas, très compact**
- **Screw & Magnet Mount Base**
- **Excellente stabilité de température**
- **Low Noise Figure**
- **Haute Sensibilité**

Applications:

-Automobile GPS
-Bluetooth Receiver
-Car Tracking Navigation System
-AVL / Fleet Management System
-External Antenna for Handheld GPS
-External Antenna for PDA Navigation

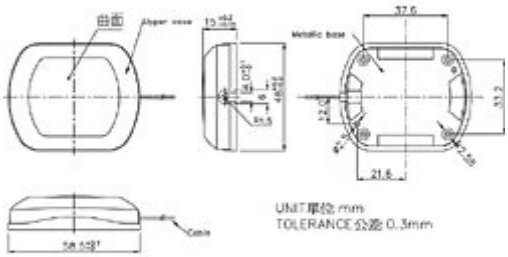

Datasheet MA-25 Antenna

Mechanical Data:

Size in mm (LxWxH)	46x38x12.5
Weight	50gram without cable
Cabel	5m RG174/U Standard, other length on request
Pulling Strength	6kg for 5 sec. With molded plastics on connector end for strain relief
Connector available	BNC,TNC,FME,MMCX, MCX, SMA, SMB or SMC in straight or right angle type
Optional	Universal Connector Adapter (FME to TNC, BNC,SMA,SMB,MCX)
Mounting	magnetic & screw mount

Environmental Conditions:

Operating Temp.	-40℃ ~ + 85℃
Storage Temp.	-40℃ ~ + 100℃
Relative Humidity	95% non-condensing

Antenna Element:

Polarization	R.H.C.P:
Absolute Gain @ Zenith	+ 3dBi typical
Gain	90°:2.0 dBi min.
	20°:-5.0dBi min
	mounted on the 60x60 mm square ground plane
Axel Ratio	90°:3 dB max
	mounted on the 60x60 mm square ground plane

Low Noise Amplifier:

Power Gain	28 +/- 4.5dB
Bandwidth	10 MHz min @S11–10db
Noise Figure	1.5 dB max
Supply Voltages	+2.5 ~+5.5 V DC
Current Consumption	2.7V~2.9V: 10.6mA+1mA
	5V : 11.5mA + 1mA
Output Impedance	50Ω
Output VSWR	2.0 max.

Overall Performance:

(Antenna element, LNA & Coax cable)

Center Frequency	1575.42
Gain	At 90° 30 +/-4.5 dBi (cable loss)
VSWR	2.0 max
Output Impedance	50Ω

Contact us:
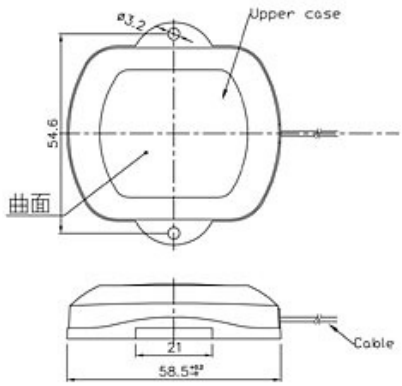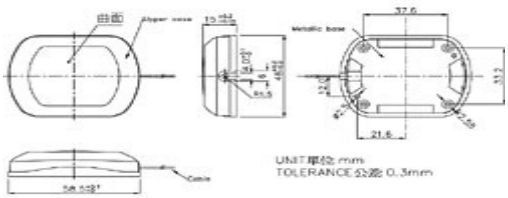
TecSys GmbH
Karl-Theodor-Str. 55
80803 Munich
Germany
Email: mark@tecsys.de
Internet: http://www.tecsys.de
Phone: +49 89 321 990 14
Fax: +49 89 307 21 65